Bike Hitch

The Bike Hitch is an attractive and space efficient bike rack. The Bike Hitch was specifically designed for sidewalks and other narrow space applications. The rack's design restricts bikes to parking parallel with the rack so bikes won't protrude out into the sidewalk or street.

American Bicycle Security Company
P.O. Box 7359
Ventura, CA 93006
Ph: (800) 245-3723 or (805) 933-3688
Fax: (805) 933-1865
www.ameribike.com
Email: turtle@ameribike.com

Bike Hitch

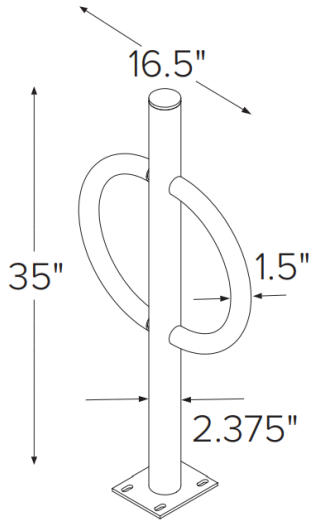

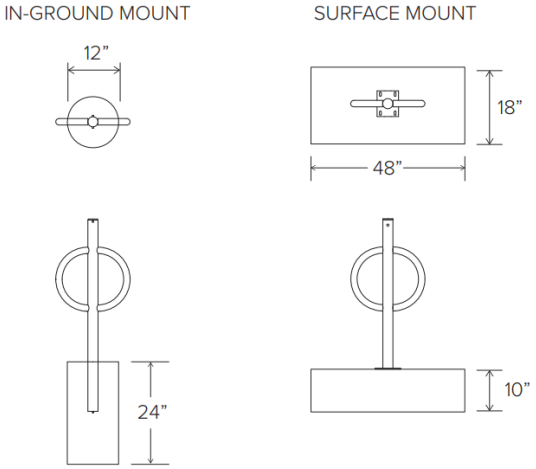

Example of rack in use

Product	Bike Hitch
Capacity	2 Bikes
Materials	Centerbeam: 2″ schedule 40 pipe (2.375″ OD) Ring: 1.5″ OD 11 gauge tube
Finishes	Standard options: Galvanized Or Powder Coated

RAL 9005	Flat Black	RAL 9003	RAL 2004	RAL 1023	Bright Yellow
RAL 6016	RAL 6018	RAL 6005	RAL 5005	RAL 5015	Purple
RAL 7011	RAL 7042	RAL 9007	RAL 1001	RAL 8014	Bronze
RAL 3003	RAL 3005				

Also available in Black Rubber Dip or Stainless steel upon request.

Installation Methods

In ground mount is embedded into concrete base. Specify in ground mount for this option.

Surface Mount has one 5″ x 6″ foot which is anchored to the ground with four anchors (included with rack).

Space Use & Setbacks

Wall Setbacks:
For racks set parallel to a wall:
Minimum: 12″
Recommended: 24″

For racks set perpendicular to a wall:
Minimum: 35″
Recommended: 38″

Distance Between Racks:
Minimum: 24″
Recommended: 38″

Street Setbacks:
Minimum: 36″

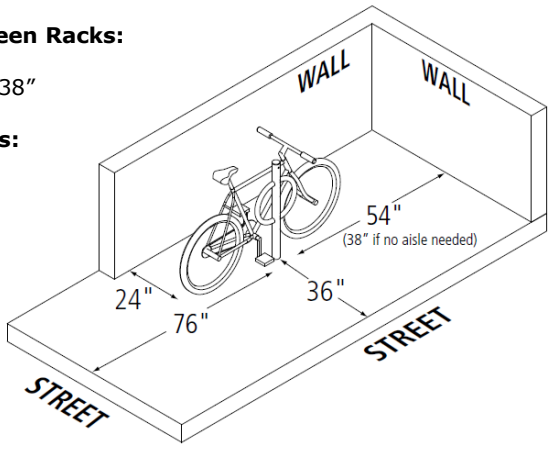

American Bicycle Security Company
P.O. Box 7359
Ventura, CA 93006
Ph: (800) 245-3723 or (805) 933-3688
Fax: (805) 933-1865
www.ameribike.com
Email: turtle@ameribike.com

***Tools Needed for Installation**

- Tape Measure
- Marker or Pencil
- Masonry Drill Bit
- Drill *(Hammer drill recommended)*
- Hammer
- Wrench 9/16”
- Level

Recommended Base materials:
Solid concrete is the best base material for installation. Ask your American Bicycle Security representative which anchor is appropriate for your application to ensure the proper anchors are shipped with your rack. Be sure nothing is underneath the base material that could be damaged by drilling.

Installation:
3/8” anchors are shipped with the rack. Place the rack in the desired location. Use a marker or pencil to outline the holes of the flange onto the base material. Drill the holes in accordance with the specifications shipped with the anchors. Make sure the holes are at least 6” away from any cracks in the base material.

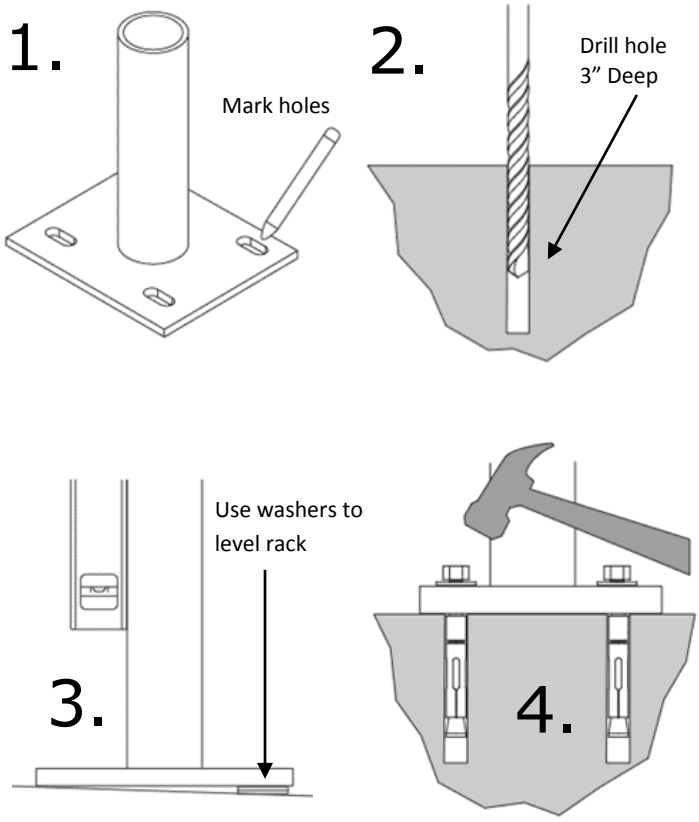

(Anchors will vary according to install surface)

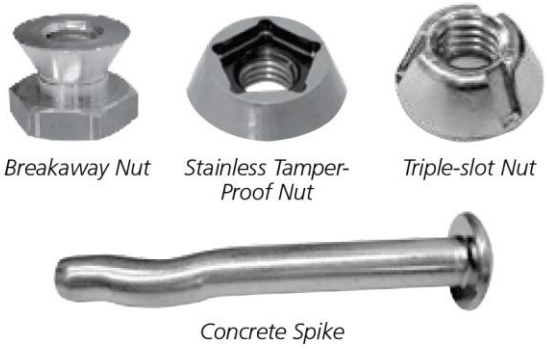

Tamper Resistant Hardware
The concrete spike is a permanent anchor. The top of the wedge anchor can also be pounded sideways after installation so that it cannot be removed. Other tamper resistant fasteners are also available for purchase.

When using the special tamper resistant nuts, always set and first tighten the anchors. Once the rack is installed, replace two nuts from the bracket (opposite sides from each other) with the tamper resistant fastener.
DO NOT OVERTIGHTEN the tamper resistant nut.

American Bicycle Security Company
P.O. Box 7359
Ventura, CA 93006
Ph: (800) 245-3723 or (805) 933-3688
Fax: (805) 933-1865
www.ameribike.com
Email: turtle@ameribike.com

***Tools Needed for Installation**

- Level
- Cement mixing tub
- Shovel
- Trowel
- Hole coring machine with 4” bit
- Access to water hose
- Materials to build brace

Installing into New Concrete

1.

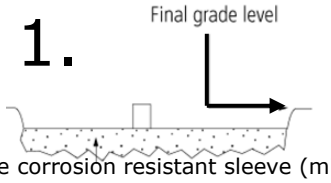

Place corrosion resistant sleeve (min. 3" inside diameter) in sand pour bed in exact location where rack will be installed. Make sure top of sleeve is at same level as desired finished concrete surface. Fill sleeve with sand to keep it in place and prevent it from filling with concrete.

2.

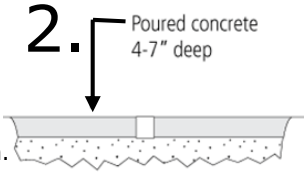

Pour concrete & allow to cure.

3.

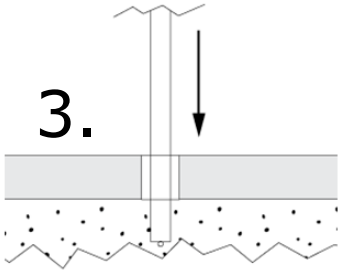

After curing, dig out sand from sleeves & insert racks, making sure they are level & at the appropriate height.

4.

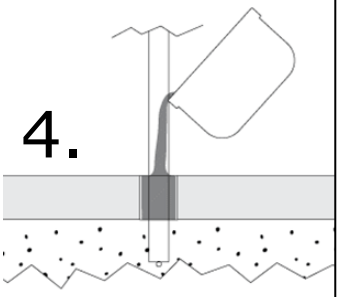

Place racks in holes, making sure it is level.

Installing into Existing Concrete

1.

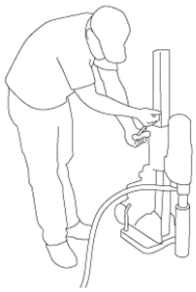

Core holes no less than 3” diameter (4”recommended) & no less than 10” deep into surface.

2.

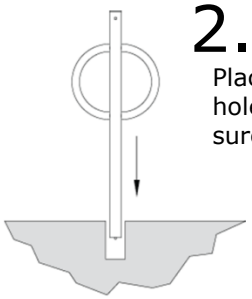

Place rack into holes, making sure it is level.

3.

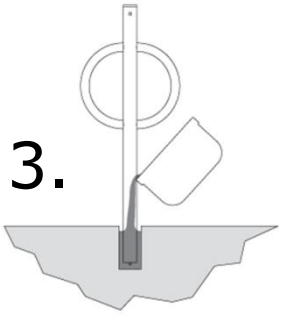

Fill holes with epoxy grout. 32” of the bike rack should remain above surface.

4.

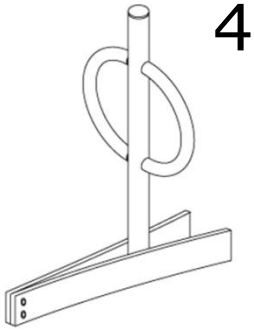

Make sure rack is level & held in place until the grout has completely set.

*An easy way to brace the rack while the grout sets is to bolt two 1x4” boards together at one end and clamp them onto the legs of the rack like a clothes pin.

American Bicycle Security Company
P.O. Box 7359
Ventura, CA 93006
Ph: (800) 245-3723 or (805) 933-3688
Fax: (805) 933-1865
www.ameribike.com
Email: turtle@ameribike.com