Pocket Shelter

Small and versatile, the Pocket Shelter stores bikes in areas that would not normally accommodate bike parking. This shelter is a modular system that provides covered and secure bike storage but is extremely space efficient and cost-effective.
The vertical Ultra Space Saver system allows both the frame and wheel of each bike to be secured with a u-lock for the greatest bike security.
Optional side and back panels add increased protection against the elements. Optional interior or exterior benches are also available.

Covered bike parking earns your site LEED credits.

American Bicycle Security Company
P.O. Box 7359
Ventura, CA 93006
Ph: (800) 245-3723 or (805) 933-3688
Fax: (805) 933-1865
www.ameribike.com
Email: turtle@ameribike.com

Pocket Shelter

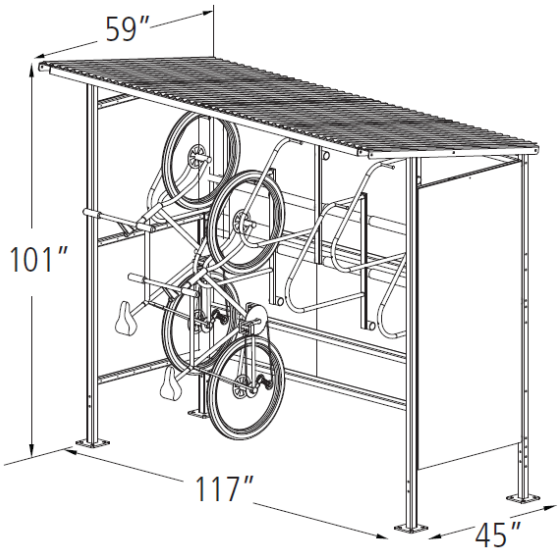

Product	Pocket Shelter
Capacity	With Ultra Space Savers: 6 Bikes With Bike Files: 10 Bikes
Materials	Uprights: 2″ x 3/16″ square tube Feet: 3/8″ plate Horizontal members: 3/16″ formed sheet Roof panels: 26g type S deck or ¼″ polycarbonate Roof members: 3/16″ formed sheet Side panels: ¼″ polycarbonate
Finishes	Standard options: Galvanized  Powder Coated

RAL 9005	Flat Black	RAL 9003	RAL 2004	RAL 1023	Bright Yellow
RAL 6016	RAL 6018	RAL 6005	RAL 5005	RAL 5015	Purple
RAL 7011	RAL 7042	RAL 9007	RAL 1001	RAL 8014	Bronze
RAL 3003	RAL 3005				

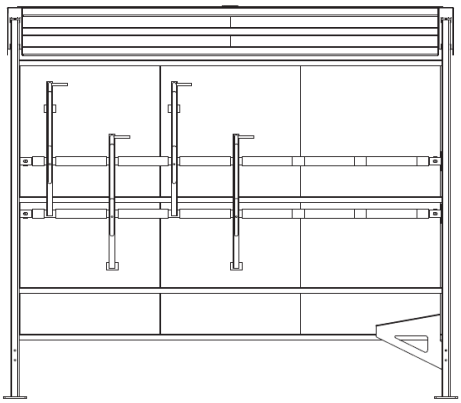

A bench may be mounted to the inside of the Pocket Shelter and still allow room for four bikes.

Installation Methods	**Surface Mount** has four 6″ square feet which must be anchored to the ground with supplied anchors. See footing details on page 4.
Space Use & Setbacks	Consult local building codes for acceptable setbacks and placement.
Load Data	Dead load = self weight of structure Live load = snow load = 45 psf Wind load = 90 mph exposure B Seismic load = moderate Footing: see page 4 Anchor bolt = Simpson strong-bolt 2, ½″ x 5 ½″, 3 7/8″ minimum embed

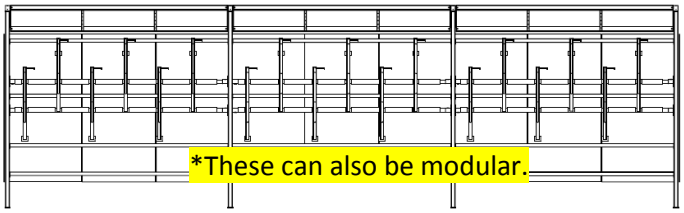

*These can also be modular.

American Bicycle Security Company
P.O. Box 7359
Ventura, CA 93006
Ph: (800) 245-3723 or (805) 933-3688
Fax: (805) 933-1865
www.ameribike.com
Email: turtle@ameribike.com

Pocket Shelter

Parts List

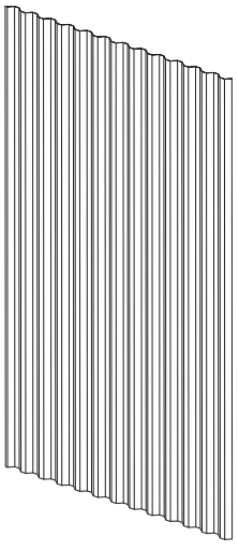

Type S Deck

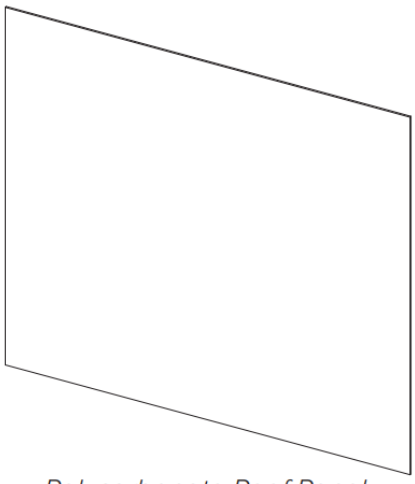

Polycarbonate Roof Panel

NOTE: You will recieve either S Deck or Polycarbonate roof, depending on indication during ordering

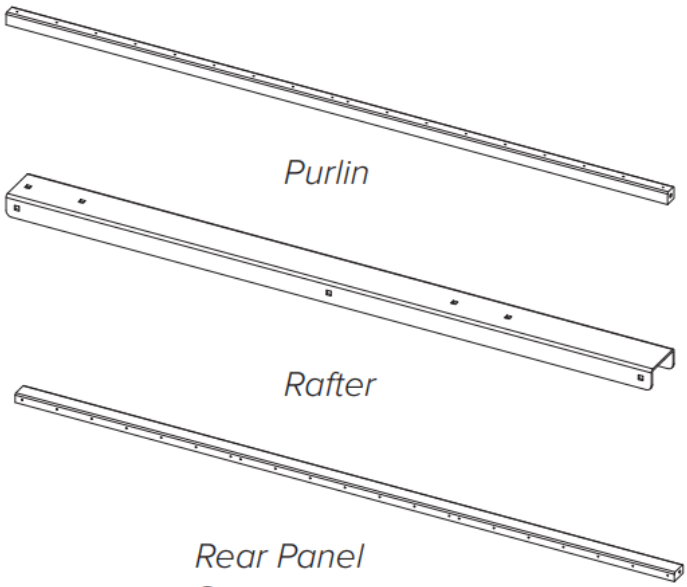

Rear Panel Support

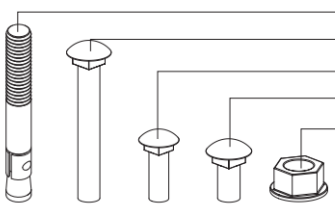

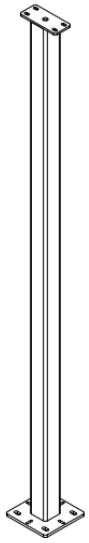

Upright

Optional:

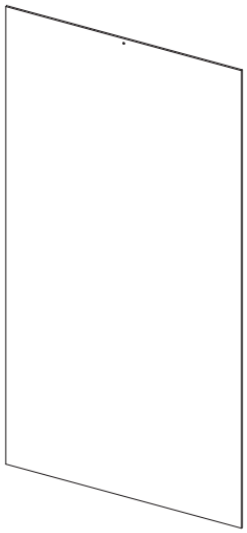

Polycarbonate Panel

Polycarbonate Flange

American Bicycle Security Company
P.O. Box 7359
Ventura, CA 93006
Ph: (800) 245-3723 or (805) 933-3688
Fax: (805) 933-1865
www.ameribike.com
Email: turtle@ameribike.com

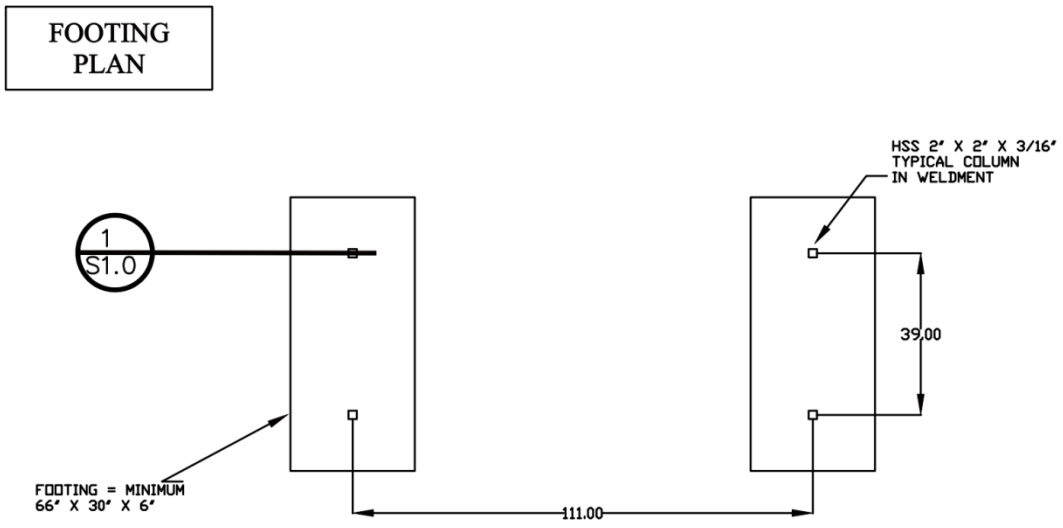

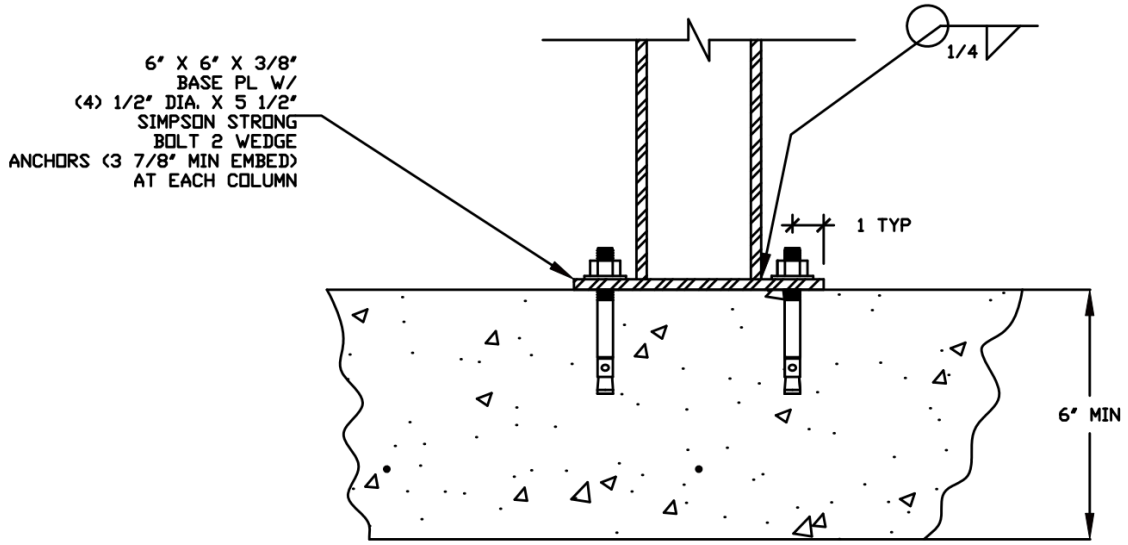

American Bicycle Security Company
P.O. Box 7359
Ventura, CA 93006
Ph: (800) 245-3723 or (805) 933-3688
Fax: (805) 933-1865
www.ameribike.com
Email: turtle@ameribike.com

1

Tools Needed:

- Hammer
- Drill (hammer drill recommended)
- 1/2" masonry drill bit
- 9/16" wrench/socket (2)
- Folding ladder (2)
- 3/8" socket with drill attachment
- 2-3 people

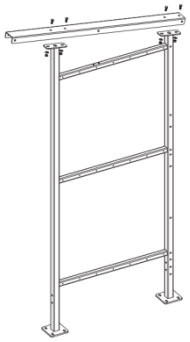

1. Attach the RAFTER TOP to the UPRIGHT with (4) 3/8" x 1" carriage bolts, nuts and washers. Repeat for all RAFTER TOPS and UPRIGHTS.

2

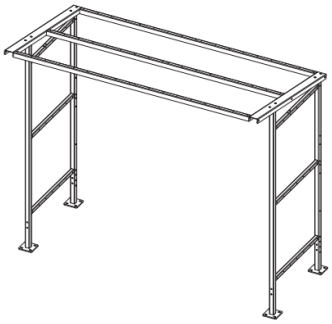

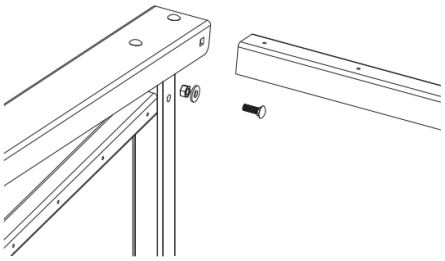

2. Stand up the UPRIGHT ASSEMBLIES and attach each PURLIN with (2) 3/8" x 1" carriage bolts, nuts and washers. Continue standing up UPRIGHT ASSEMBLIES and attaching PURLINS if building a modular shelter.

3

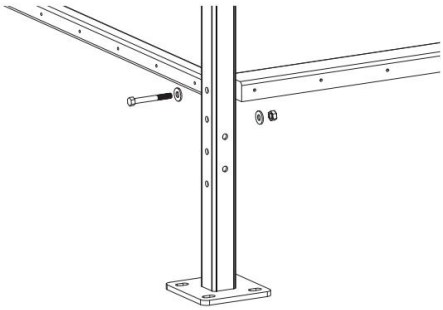

3. Attach each REAR PANEL SUPPORT with (2) 3/8" x 3.25" bolts, (4) washers, and (2) nuts. The surface with 21 holes should be facing away from the shelter.

4

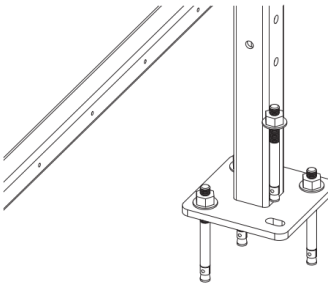

4. Using the UPRIGHT feet as a guide, drill ½" dia. x 5.5" holes in the concrete footings at each UPRIGHT foot. Install (4) ½" dia. x 5.5" wedge anchors at each UPRIGHT foot. See footing diagram for more detail.

American Bicycle Security Company
P.O. Box 7359
Ventura, CA 93006
Ph: (800) 245-3723 or (805) 933-3688
Fax: (805) 933-1865
www.ameribike.com
Email: turtle@ameribike.com

1. METAL ROOF

If using metal roofing, place the initial section of TYPE S DECK and secure with (6) ¼" x 1" self-drilling screws. The screws will drill through the TYPE S DECK and shelter without a pilot hole. Place the second section of TYPE S DECK with sufficient overlap and secure with (6) ¼" x 1" self-drilling screws. Continue with the remaining sections. The last section of TYPE S DECK will receive (9) ¼" x 1" self-drilling screws.

1

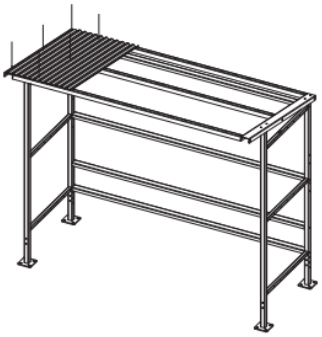

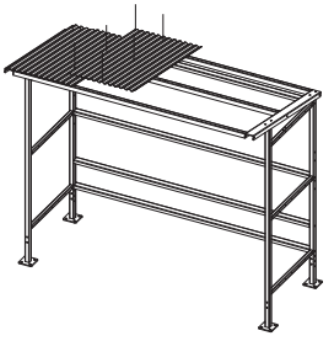

2. POLYCARBONATE ROOF

If using polycarbonate roofing, place POLYCARBONATE ROOF PANELS and POLYCARBONATE FLANGE. After locating a pilot hole in the PURLIN, use a ¼" x 1" self-drilling screw to drill through the POLYCARBONATE ROOF PANEL and into the pilot hole. Confirm the POLYCARBONATE ROOF PANEL is aligned with the shelter and continue with all pilot holes. Use ¼" x 1.5" self-drilling screws when attaching the POLYCARBONATE FLANGE.

2

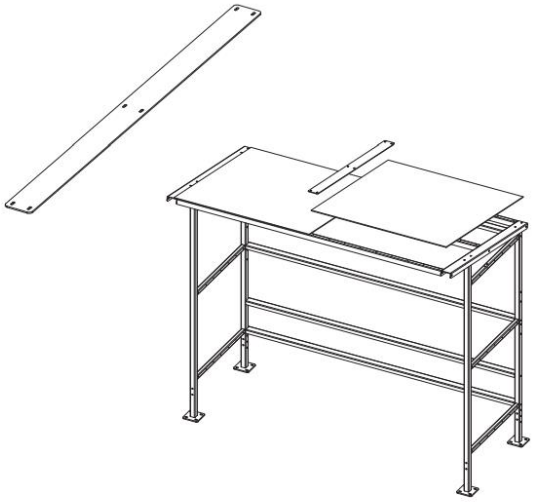

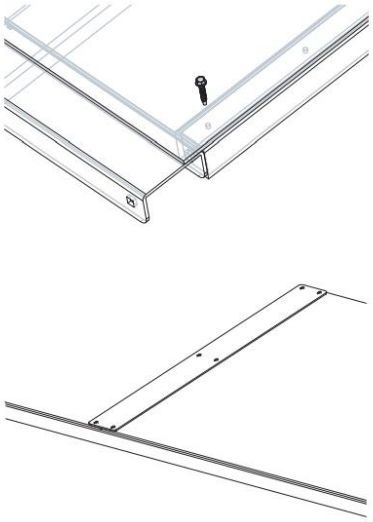

American Bicycle Security Company
P.O. Box 7359
Ventura, CA 93006
Ph: (800) 245-3723 or (805) 933-3688
Fax: (805) 933-1865
www.ameribike.com
Email: turtle@ameribike.com

1. If using Ultra Space Saver racks, assemble the racks, secure each BAR CLAMP to CROSSBARS with (2) 3/8" x ½" bolts, lift into place, and secure to shelter with (8) 3/8" x 3.25" bolts, (16) washers, and (8) nuts.

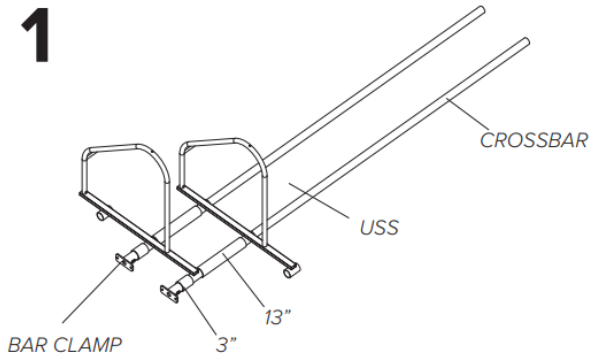

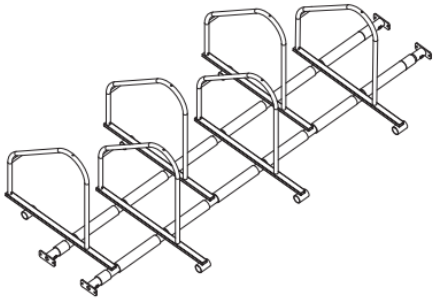

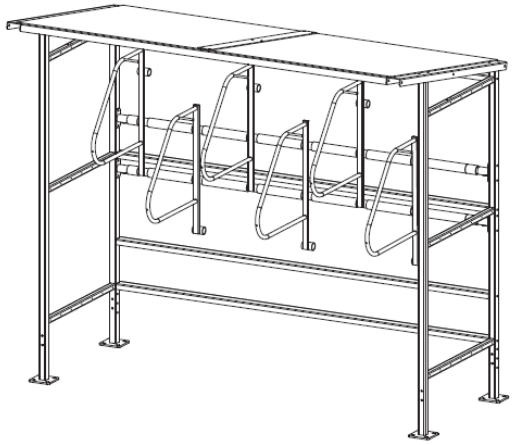

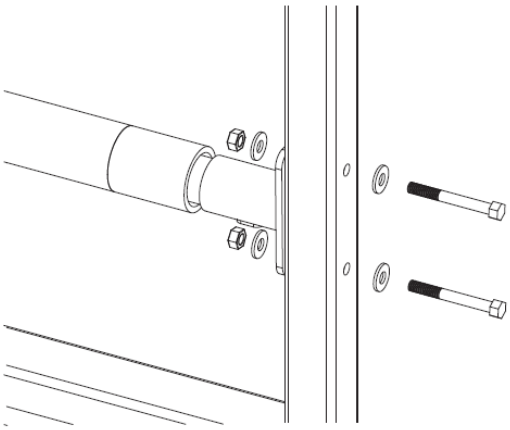

American Bicycle Security Company
P.O. Box 7359
Ventura, CA 93006
Ph: (800) 245-3723 or (805) 933-3688
Fax: (805) 933-1865
www.ameribike.com
Email: turtle@ameribike.com

1. If using Bike File racks, assemble the racks, lift into place, and secure to shelter with (2) 3/8” x 2.5” tamper-resistant bolts, washers, and Unistrut nuts.

1

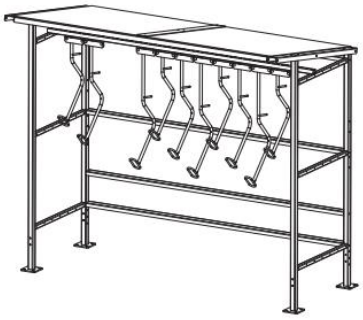

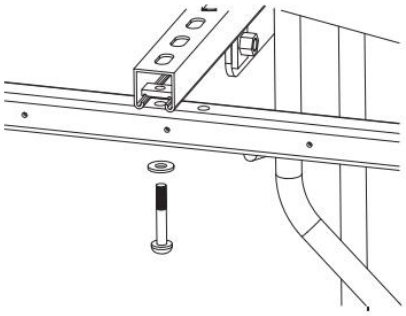

American Bicycle Security Company
P.O. Box 7359
Ventura, CA 93006
Ph: (800) 245-3723 or (805) 933-3688
Fax: (805) 933-1865
www.ameribike.com
Email: turtle@ameribike.com

1. SIDE PANELS

If using side panels, place the PANEL with the single pre-drilled hole oriented towards the top. Align the pre-drilled hole and the corresponding pilot hole in the shelter and secure with a ¼" x 1" self-drilling screw. Confirm that the PANEL is aligned with the shelter and not bowed. The next self-drilling screws will drill through the PANEL and into the pilot holes at locations 2 and 3. Continue with the next 18 self-drilling screws while working from the center outwards. Repeat for the other side of the shelter.

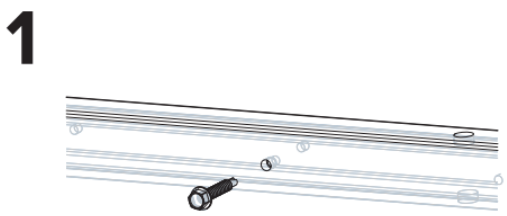

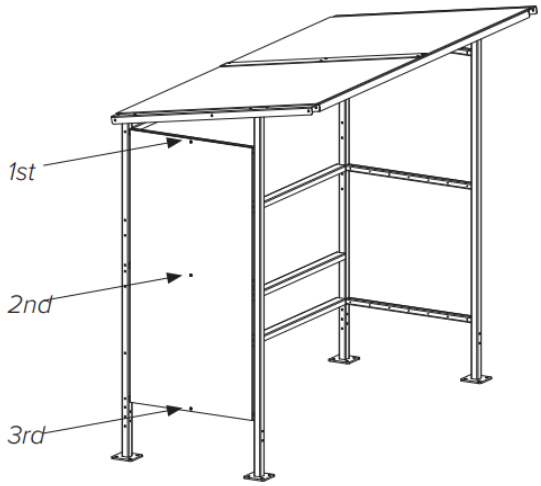

2. REAR PANELS

If using rear panels, place the PANEL with the single pre-drilled hole oriented towards the top. Align the pre-drilled hole and the corresponding pilot hole in the shelter and secure with a ¼" x 1" self-drilling screw. Repeat for the next (2) rear PANELS. Confirm that the PANELS are aligned with the shelter and each other and not bowed. The next self-drilling screws will drill through the PANEL and into the pilot holes at locations 2, 3, and 4. Continue with the next 24 self-drilling screws in each PANEL while working from the center outwards.

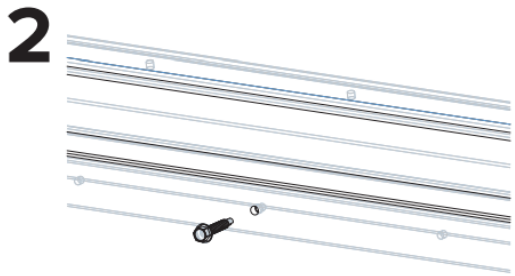

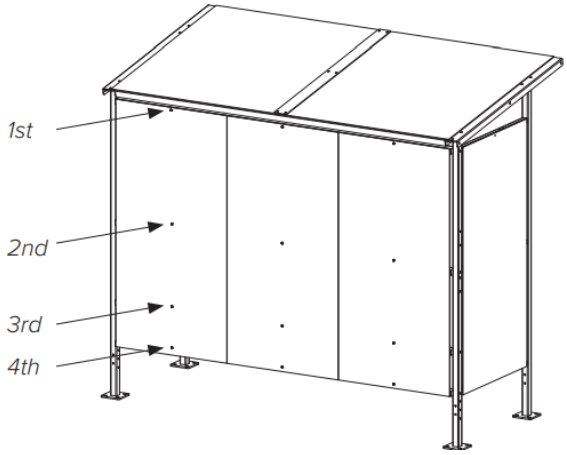

American Bicycle Security Company
P.O. Box 7359
Ventura, CA 93006
Ph: (800) 245-3723 or (805) 933-3688
Fax: (805) 933-1865
www.ameribike.com
Email: turtle@ameribike.com

1. To attach a single SIDE BENCH, use (4) 3/8” x 3.25” bolts, (8) washers, (4) nuts, and a SIDE BENCH SPACER.

1

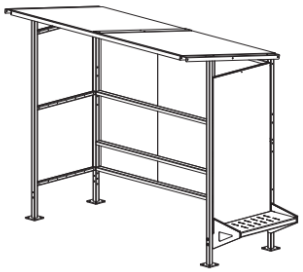

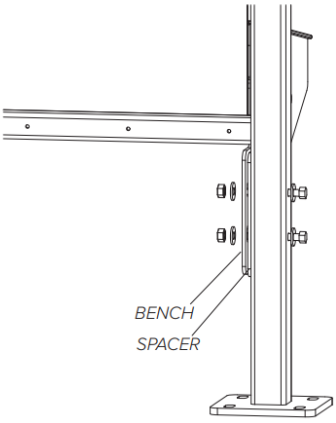

2. To attach two opposing SIDE BENCHES, use (4) 3/8” x 3.25” bolts, (8) washers, and (4) nuts.

2

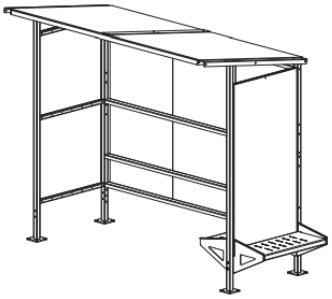

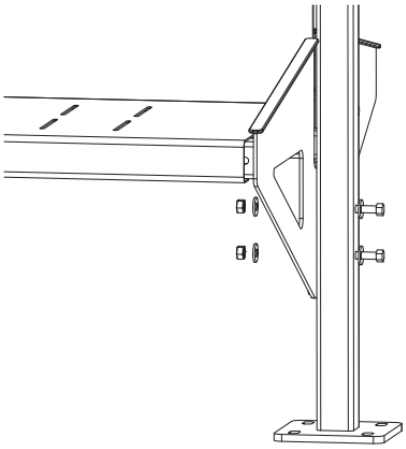

American Bicycle Security Company
P.O. Box 7359
Ventura, CA 93006
Ph: (800) 245-3723 or (805) 933-3688
Fax: (805) 933-1865
www.ameribike.com
Email: turtle@ameribike.com

3. To attach a single REAR BENCH, use (6) 3/8” x 3.25” bolts, (12) washers, (6) nuts, and a REAR BENCH SPACER.

3

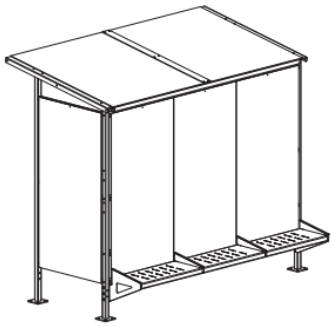

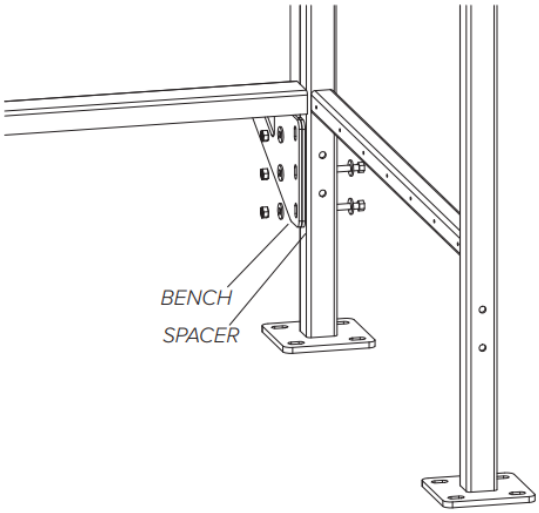

4. To attach two opposing REAR BENCHES, use (6) 3/8” x 3.25” bolts, (16) washers, and (6) nuts.

4

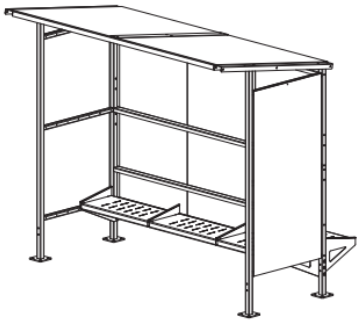

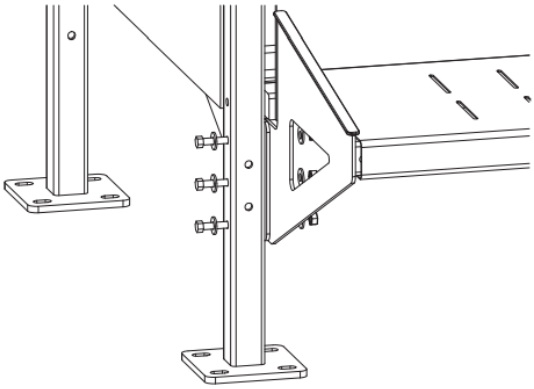

American Bicycle Security Company
P.O. Box 7359
Ventura, CA 93006
Ph: (800) 245-3723 or (805) 933-3688
Fax: (805) 933-1865
www.ameribike.com
Email: turtle@ameribike.com