Helix Rack

Example of rack in use

Please note: Picture shows 2 units

The Helix Rack is an attractive double-sided, space efficient bicycle rack. Each Helix parks six bikes. The Helix supports bicycles at two points and allows for the wheels and frame to be secured using a u-style lock. The curve and pitch of the Helix Rack makes it nearly impossible to cut with a pipe cutter.

American Bicycle Security Company
P.O. Box 7359
Ventura, CA 93006
Ph: (800) 245-3723 or (805) 933-3688
Fax: (805) 933-1865
www.ameribike.com
Email: turtle@ameribike.com

Helix Rack

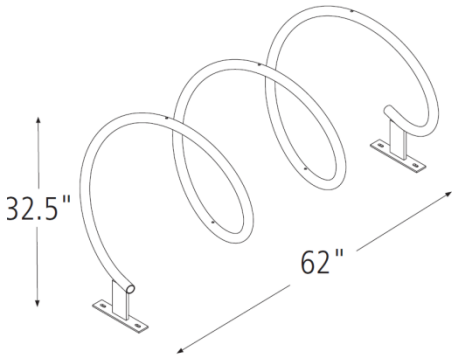

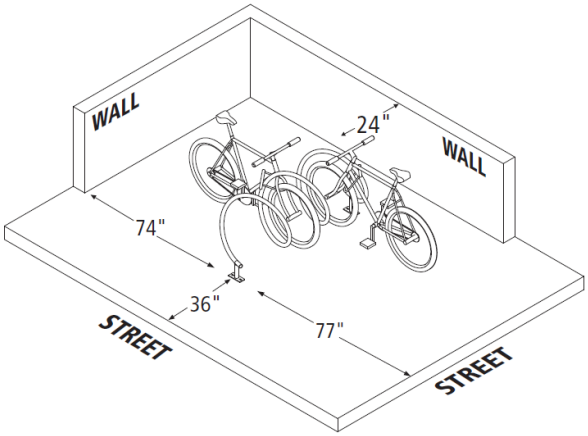

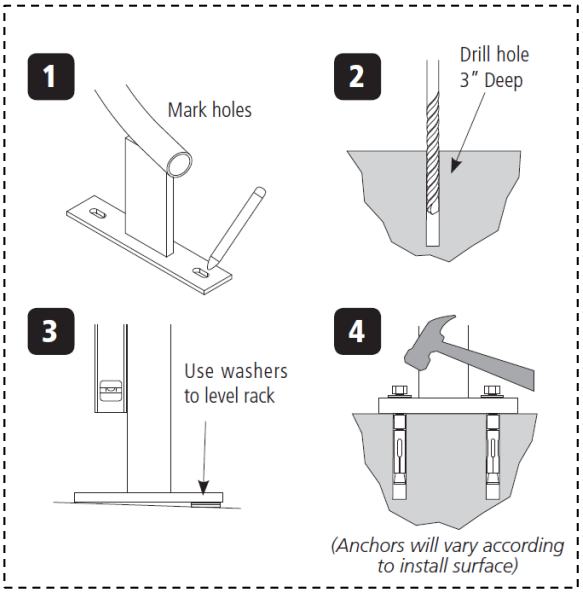

Product	Helix Rack
Capacity	6 Bikes
Materials	1.25" Pipe (1.66" OD)
Finishes	Standard options: Galvanized Or Powder Coated

RAL 9005	Flat Black	RAL 9003	RAL 2004	RAL 1023	Bright Yellow
RAL 6016	RAL 6018	RAL 6005	RAL 5005	RAL 5015	Purple
RAL 7011	RAL 7042	RAL 9007	RAL 1001	RAL 8014	Bronze
RAL 3003	RAL 3005				

Also available in Thermoplastic or Stainless steel.

Installation Methods: **Foot Mount** has two 2.5"x6"x.25" feet with two anchors per foot. Specify foot mount for this option.

Space Use & Setbacks: **Wall Setbacks:** A minimum of 74" should be left between the wall and the long side of the rack. If placing the Helix perpendicular to the wall 12"-24" is the recommended setback.

Distance Between Racks: Helix ends can be placed together to look like a continuous spiral. Helixes placed parallel with each other should allow for 13' between each rack, measured center to center.

Street Setbacks: 74" is the minimum setback distance between the street and the rack. 77" is recommended.

Recommended Base Materials:
Solid concrete is the best base material for installation. Ask your Dero Rack representative which anchor is appropriate for your application to ensure the proper anchors are shipped with your rack. Be sure nothing is underneath the base material that could be damaged by drilling.

Installation:
3/8" anchors are shipped with the rack. Place the rack in the desired location. Use a marker or pencil to outline the holes of the flange onto the base material. Drill the holes in accordance with the specifications shipped with the anchors. Make sure the holes are at least 3" away from any cracks in the base material. Tap in anchors and follow directions for the specific anchor shipped with the rack.

American Bicycle Security Company
P.O. Box 7359
Ventura, CA 93006
Ph: (800) 245-3723 or (805) 933-3688
Fax: (805) 933-1865
www.ameribike.com
Email: turtle@ameribike.com